34 863 GN0 **GROHTHERM SMARTCONTROL CONCEALED SHOWER SYSTEM WITH RAINSHOWER SMARTACTIVE 310**

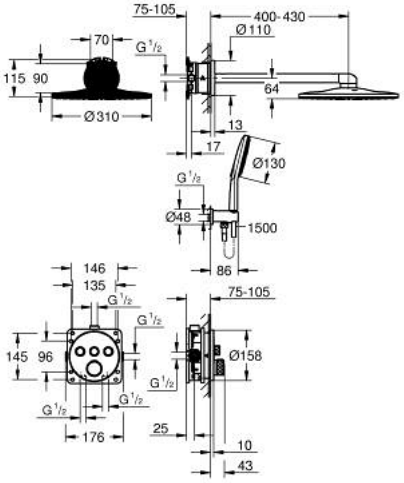

OPIS PROIZVODA

- Colour: brushed cool sunrise
- sastoji se od:
- podžbukne termostatske miješalice s 3 ventila (29 121)
- GROHE Rapido SmartBox universal rough-in box, 1/2" (35 604)
- Rainshower SmartActive 310 head shower set 2 sprays (26 475) including horizontal shower arm 430 mm and head shower rough-in (26 483)
- Rainshower SmartActive 130 hand shower 3 sprays
- shower outlet elbow 1/2" with holder (26 658)
- Silverflex crijevo za tuš 1500 mm 1/2 x 1/2"
- optional flow regulator 9.5 l/min included for hand shower